Due to the uncertainty as to the AP Exam date, it is desirable that students continue learning the required topics during this break from school. Please follow the outline below in order to cover the material.

Unit 9 – DC Circuits

The PowerPoints are available through the Moodle. Use them as a starting point for covering the topics. I will be trying to update them to make them more friendly to independent learners.

Links to videos that cover the topics are posted in the Moodle. I will be adding more links to this section.

This unit is covered in Chapters 9 and 10 in the Openstax textbook, Volume 2 (link at the top of the Moodle).

Assessments:

Test 9A – This is the class test for the unit. When we return you will be given this test with the exact same questions but with the numbers varied.

Skill Set 9 - The skill set will be due after we return but start working on it.

Unit Problem 9 – This will also be due after we return.

Unit 10 – Magnetic Fields and Forces

The PowerPoints are available through the Moodle. Use them as a starting point for covering the topics. I will be trying to update them to make them more friendly to independent learners.

Links to videos that cover the topics are posted in the Moodle. I will be adding more links to this section.

This unit is covered in Chapters 11 and 12 in the Openstax textbook, Volume 2 (link at the top of the Moodle).

Assessments:

Test 10A – This is the class test for the unit. When we return you will be given this test with the exact same questions but with the numbers varied.

Skill Set 10 - The skill set for this unit is open. It will be due after we return but start working on it now.

Unit Problem 10 – Do your best to start working through this unit problem. This will also be due after we return.

AP Physics C Unit Problem #9 Name _____

Period _____

Answer the following questions. Be sure to clearly show all steps used to reach a solution and include the proper units on the final answer.

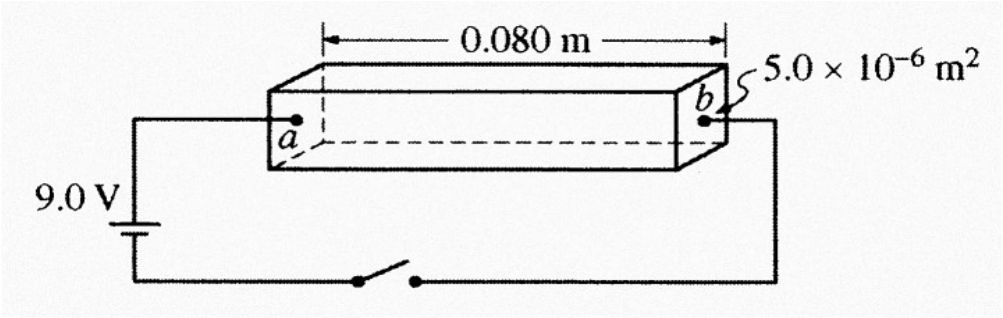

A 9.0 V battery is connected to a rectangular bar of length 0.080 m, uniform cross-sectional area 5.0 x 10^{-6} m^2, and resistivity 4.5 x 10^{-4} Ω●m, as shown above. Electrons are the sole charge carriers in the bar. The wires have negligible resistance. The switch in the circuit is closed at time **t** = 0.

(a) Calculate the power delivered to the circuit by the battery.

(b) On the diagram below, indicate the direction of the electric field in the bar.

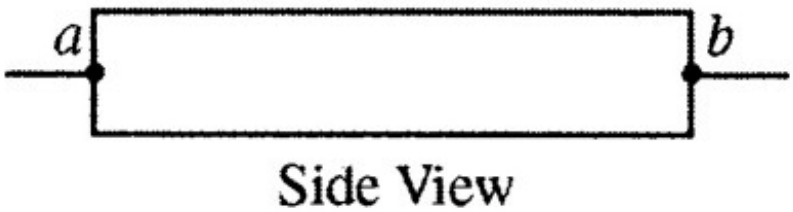

Explain your answer.

(c) Calculate the strength of the electric field in the bar.

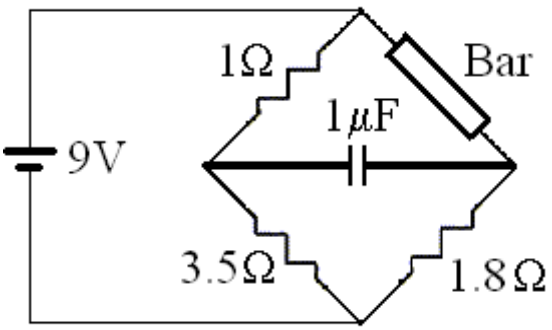

(d) The metal bar is now placed in a circuit as shown above. The circuit has been connected for an extended period of time so the capacitor is fully charged. Calculate the following:

i) the current through the 1Ω resistor

ii) the potential across the 1.8Ω resistor

iii) the charge stored by the capacitor

Name _____ ID: A

AP Physics C Test 9A

Problems: *Solve the following. Show work on scrap paper when appropriate for credit. Work shown on this sheet may not be scored. Write all numerical answers on answer sheet in space provided.*

A rheostat is a device that allows for adjustable resistance. It is often constructed from a coil of wire that has a movable contact which effectively changes the length of the wire that is used as a resistor. A given rheostat is constructed from 20.0 m of copper wire. The diameter of the wire is 0.70 mm and the resistivity of copper is 1.68×10^{-8} Ωm. Answer the following questions based on this information.

1. What is the resistance of the entire 20.0 m of wire in the rheostat?

2. What is the resistance if only 10.0 m of wire is connected to the circuit?

3. The rheostat is connected to a battery with an emf of 6.0 V. What would the current through the entire 20.0 m of wire in the rheostat be if the battery has no internal resistance?

4. The battery actually has an internal resistance of 0.2 Ω. What is the power delivered to the entire 20.0 m of wire in the rheostat by the battery when the internal resistance is taken into account?

5. Would the resistance of the rheostat increase, remain the same or decrease if it was immersed in a liquid nitrogen bath? Explain your answer.

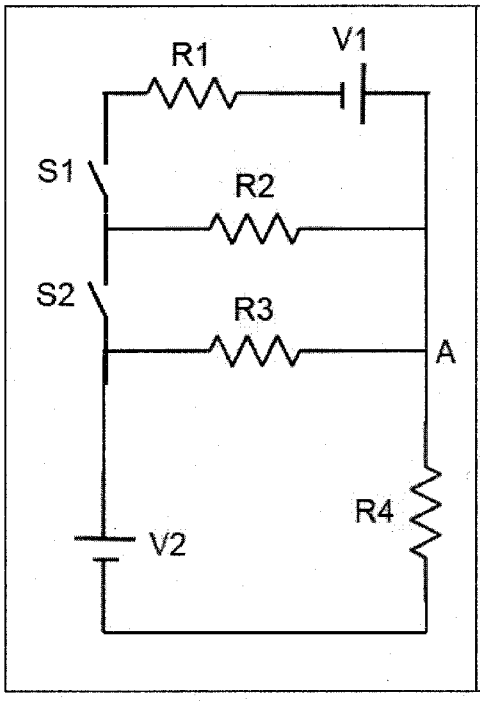

Values for components:

R1	5.2 Ω
R2	4.5 Ω
R3	5.7 Ω
R4	8.0 Ω
V1	6.8 V
V2	9.6 V

A circuit is constructed as shown above. Answer the following questions based on this circuit

6. When switches S1 and S2 are open what is the total resistance of the circuit?

7. When switch S1 is open and switch S2 is closed what is the total resistance of the circuit?

8. Both switches are now closed. Using the schematic of the circuit on your answer sheet, draw a diagram of the currents through each element of the circuit. Be sure to indicate the direction of positive current flow and label each current consistently. Do not be concerned about whether your directions are correct or not. You will be graded on the manner in which your diagram follows the rules presented in class.

9. Write a Kirchhoff's Current Rule equation for the junction labeled A in the diagram. Be sure to follow the current directions and labels you used in your answer to question #8.

10. Write a Kirchhoff's Voltage Rule equation for the loop consisting of the 9.6 V battery, 5.7 Ω resistor and the 8.0 Ω resistor. Be sure to use the current directions and labels you used in your answer to question #8 and to follow the proper sign conventions.

11. What is the current through the 8.0 Ω resistor when both switches are closed? Be sure to indicate both the magnitude and the direction (up or down).

AP Physics C Unit Problem #10 Name _____

Period _____

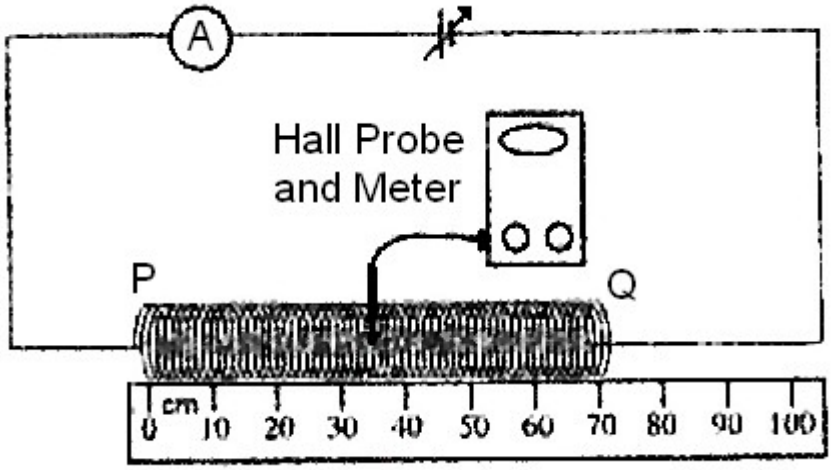

A student performs an experiment to measure the magnetic field along the axis of the long, 100-turn solenoid PQ shown above. She connects ends P and Q of the solenoid to a variable power supply and an ammeter as shown. End P of the solenoid is taped at the 0 cm mark of a meterstick. The solenoid can be stretched so that the position of end Q can be varied. The student then positions a Hall probe (a device used to measure the magnetic field at a point) in the center of the solenoid to measure the magnetic field along its axis. She measures the field for a fixed current of 3.0 A and various positions of the end Q. The data she obtains are shown below.

Trial	Position of End Q (cm)	Measured Magnetic Field (T) (directed from P to Q)	n (turns/m)
1	40	9.70×10^{-4}	
2	50	7.70×10^{-4}	
3	60	6.80×10^{-4}	
4	80	4.90×10^{-4}	
5	100	4.00×10^{-4}	

(a) Complete the last column of the table above by calculating the number of tuns per meter.

(b) On the axes below, plot the measured magnetic field **B** versus **n**. Draw a best-fit straight line for the data points.

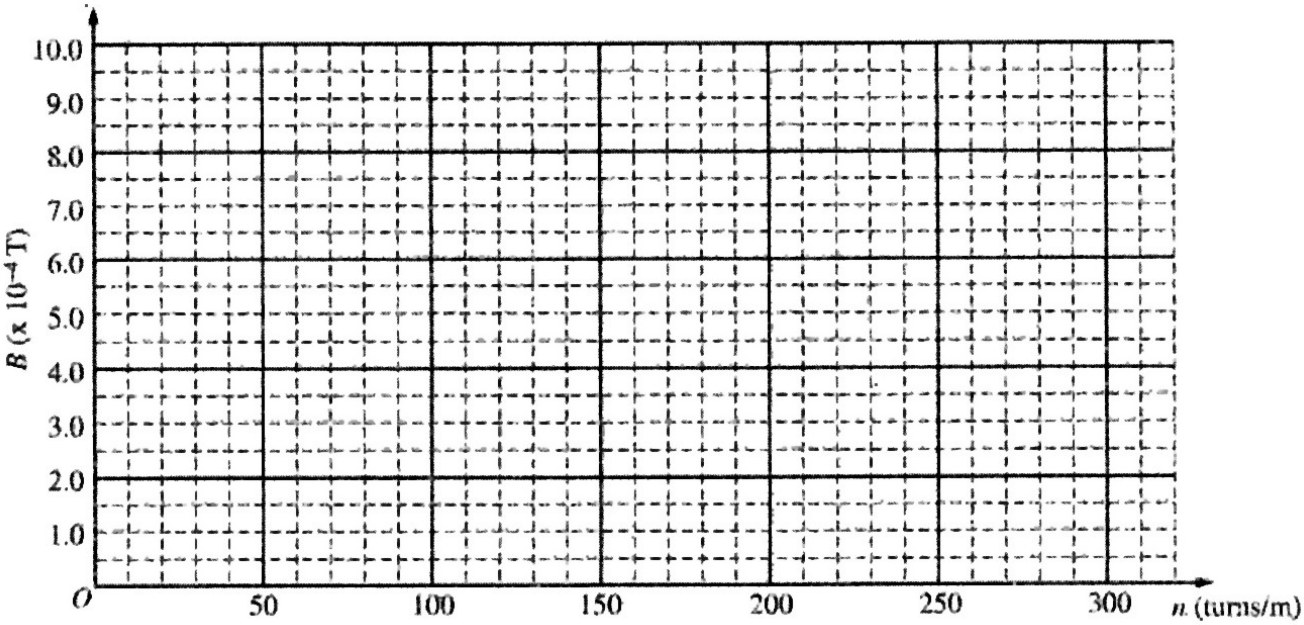

(c) From the graph, obtain the value of μ_o, the magnetic constant.

(d) Using the known value of $\mu_o = 4\pi \times 10^{-7}$ (T·m)/A, determine the percent error in the experimental value of μ_o computed in part (c).

AP Physics C Test 10A

Problems *Solve the following. Show work on scrap paper when appropriate for credit. Write all numerical answers on answer sheet in space provided. Write short answers on back of answer sheet.*

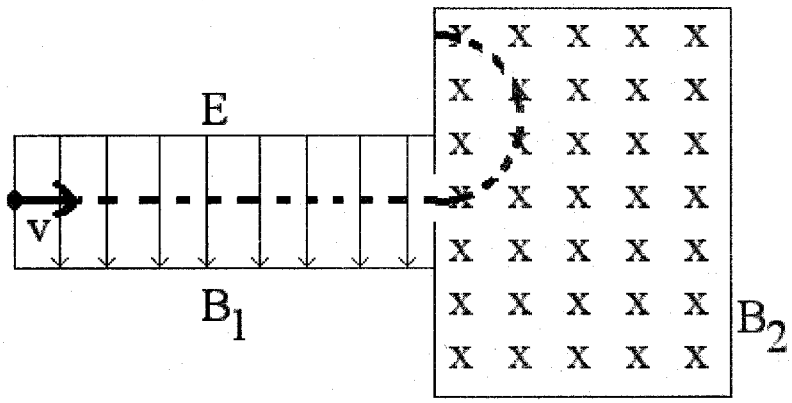

A mass spectrometer consists of a velocity selector with an electric field $\boldsymbol{E}$ = 16190 N/C directed as shown in the picture above and a magnetic field $\boldsymbol{B_1}$ combined with a chamber that has a magnetic field $\boldsymbol{B_2}$ = 1.8 T directed into the page. A particle with charge $|q| = 3.2\text{x}10^{-19}$ C and mass $\boldsymbol{m} = 3.15\text{x}10^{-27}$ kg enters the velocity selector with a speed $\boldsymbol{v} = 5\text{x}10^{6}$ m/s. Ignore the effects of gravity while the particle is in the mass spectrometer.

1) What is the magnitude of the force on the particle due to the electric field $\boldsymbol{E}$ while the particle is in the velocity selector?
2) What is the magnitude of the force on the particle due to the magnetic field $\boldsymbol{B_1}$ while the particle is in the velocity selector if it follows the path shown in the diagram?
3) What is the magnitude and direction of the field $\boldsymbol{B_1}$?
4) What is the magnitude of the force on the particle due to the magnetic field $\boldsymbol{B_2}$ while the particle is in the chamber at the right of the mass spectrometer?
5) What is the radius $\boldsymbol{r}$ of the circular motion of the particle while it is in the chamber?
6) Is the particle positively or negatively charged? Justify your answer.

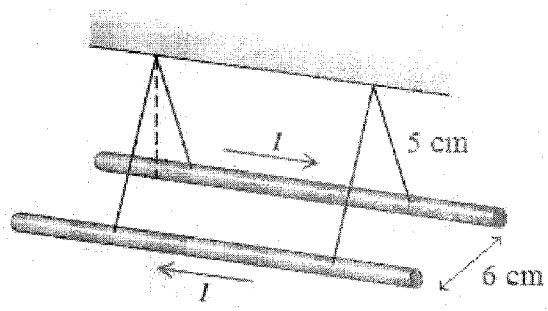

Two wires are suspended from 5.0 cm long threads. When a current I is passed through the wires in the directions indicated, the wires move to an equilibrium position where they are 6.0 cm apart. The mass of each wire is 1.92 g and the length of each wire is 25.3 cm. Answer the following questions based on this information.

7) Use the dot on your answer sheet to draw and label a free body diagram of the forces on one of the wires. Draw individual forces only, not any components or resultants.

8) Write an expression for magnitude of B, the magnetic field intensity, at the location of one of the wires when it is in the equilibrium position shown. Express your answer in terms of I and any necessary constants.

9) Write an expression for F_B, the magnetic force on one of the wires, when the wires are suspended in the equilibrium position shown. Express your answer in terms of I and any necessary constants.

10) Write an expression for the magnetic force F_B on one of the wires in terms of F_T, the tension in the thread, when the wires are suspended in the equilibrium position shown. Do not include any other variables in your expression.

11) Solve for the value of I, the current in the wires, that is necessary to suspend the wires in the equilibrium position shown.